AquaPLUS™

AquaPLUS™ AXP

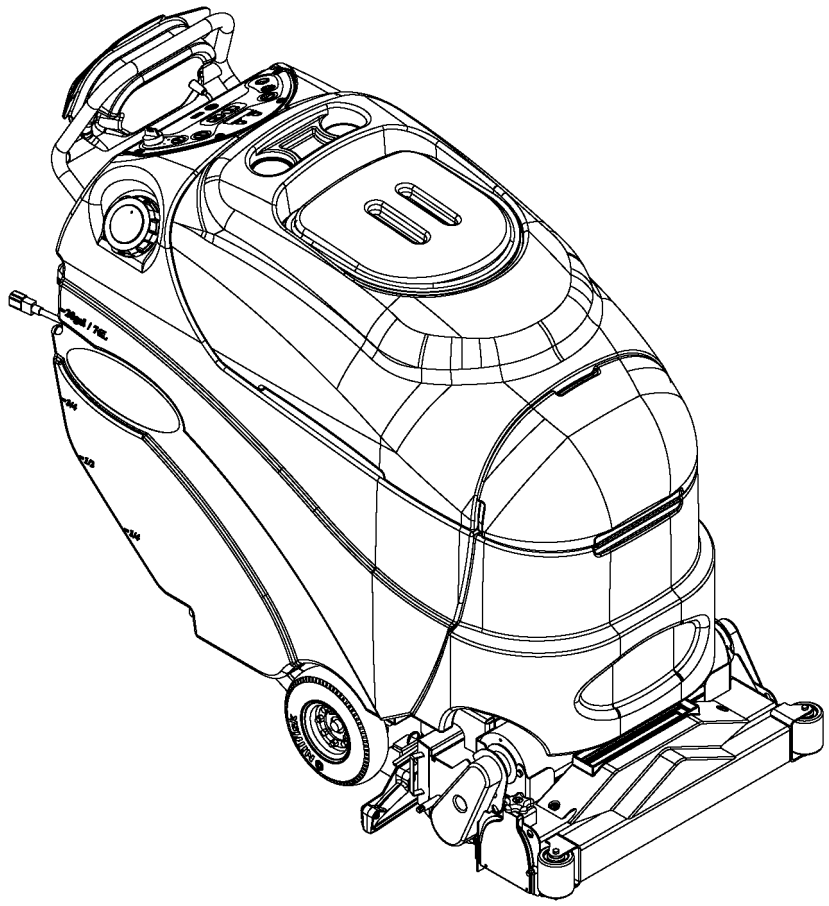

Parts List

Advance Models: 56317001, 56317002

Advance
by Nilfisk-Advance

4/07 revised 8/07 FORM NO. 56042476

DESCRIPTION	PAGE

Chassis System 2-3
Decal System 4-5
Recovery System 6-7
Scrub System-Cylindrical 8-9
Solution System / Electrical-1 10-11
Solution System / Electrical-2 12-13
Chemical Assembly (AXP Models Only) 14-15
Paddle Assembly 16-17
Wiring Diagram 18-19
Optional Kits & Accessories 20

WHEN ORDERING PARTS

* Use the 8 digit numbers from the “Ref. No.” columns in this parts list.
* Specify the model and serial number of the machine.
* Use the space below to record the model and serial number for future reference.

Model _____ Serial No. _____

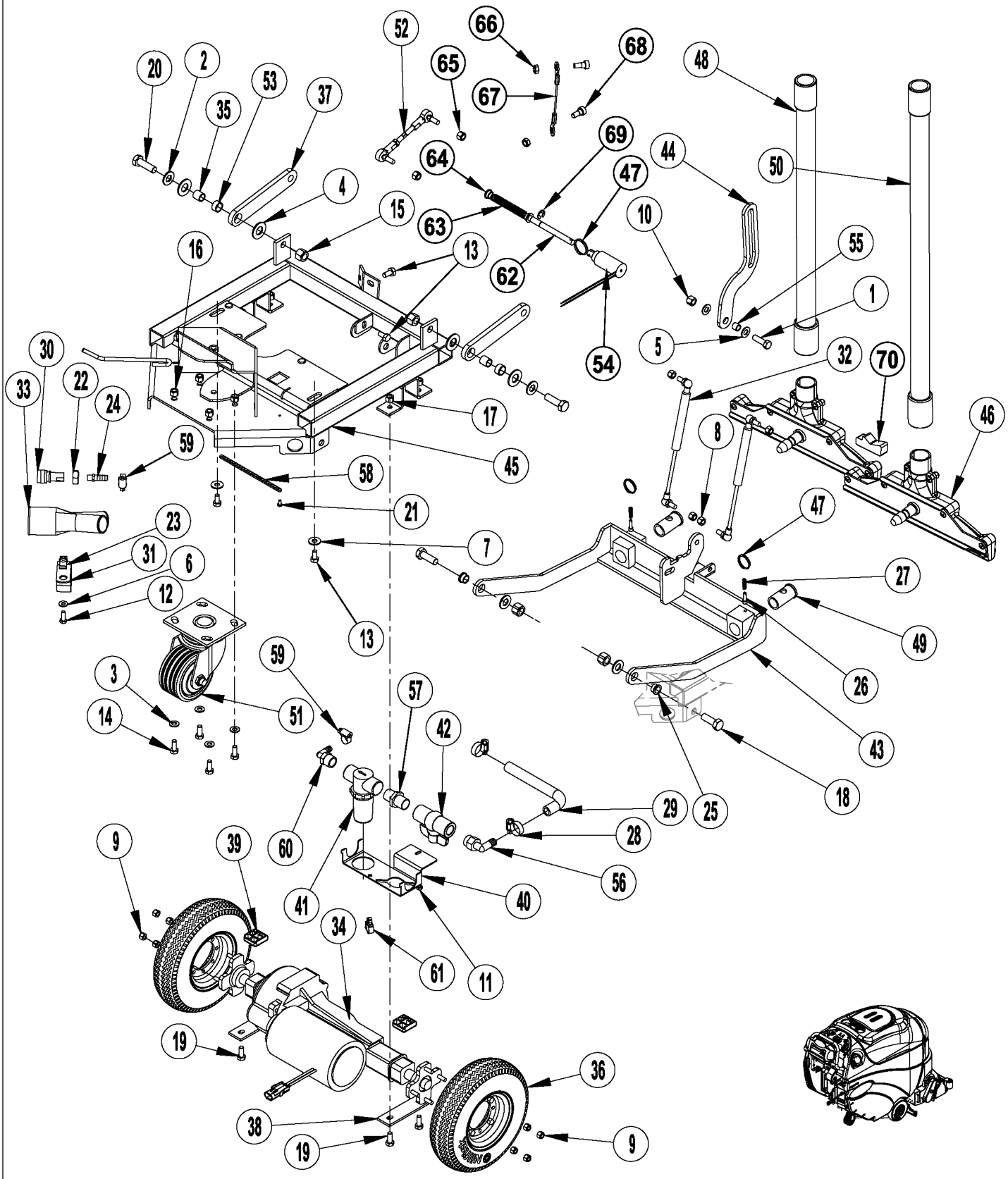

FORM NO. 56042476

Item	Ref. No.	Qty	Description
1	56001858	1	Scr, Hex 3/8-16 x 1.25
2	56001879	4	Wsh, Flt SAE 1/2
3	56001939	4	Wsh, Flt SAE 5/16
4	56002022	4	Wsh, Flt SAE 5/8
5	56002063	2	Wsh, Flt SAE 3/8
6	56002098	1	Wsh, Flt SAE 1/4
7	56002220	2	Wsh, Flt STD 5/16
8	56002701	4	Nut, Hex Nyl Loc 5/16-18
9	56002708	8	Nut, Hex Nyl Loc 1/4-20
10	56002769	1	Nut, Hex Nyl Loc 3/8-16
11	56002832	1	Nut, Hex Nyl Loc-Thin 10-24
12	56002948	1	Scr,Hex Hd Loc 1/4-20 x .75
13	56002988	4	Scr, Hex SS 5/16-18 x .62
14	56003179	4	Scr, Hex Thd To Hd M8-1.25 X 20mm
15	56003312	4	Nut, Hex Nyl Loc M12-1.75
16	56003389	4	Nut, Hex Nyl Loc M8-1.25
17	56003405	4	Nut, Hex Nyl Loc SS M8-1.25
18	56003415	2	Scr, Hex M12-1.75 x 35mm
19	56003435	4	Scr, Hex SS M8-1.25 x 20mm
20	56003637	2	Scr, Hex M12-1.75 x 40mm
21#	56009030	1	Scr, Pan Phil Thd Form 10-24 x .38
22	56009078	1	Nut, Hex Jam SS 5/8-18
23	56009289	1	Nut, Retainer 1/4-20
24	56104299	1	Barb, Adapter 3/8 x 1/8 Npt
25	56185264	2	Bearing, Flange
26	56317139	2	Pin
27	56201448	2	Spring, Compression
28	56219932	2	Clamp, Hose SAE #6
29	56262180	1	Hose, Spiral .500
30	56265208	1	Socket,1/8 FPT
31	56305492	1	P-Clamp
32	56314206	2	Gas Spring
33	56314557	1	Y-Tube
34	56315062	1	Transaxle, 24V **(M1)**
*	56315377	1	Motor
*	56315378	4	Carbon Brush
*	56315379	2	Neoprene Mounting Sleeve
35	56315080	2	Bushing
36	56315115	2	Wheel, Drive
37	56315179	2	Linkage Arm
38	56315234	2	Plate
39	56315258	2	Shim
40	56315260	1	Bracket, Filter Mount
41	56315296	1	Solution Filter
42	56315607	1	Ball Valve
43	56317029	1	Shoe Support Weld't
44	56317035	1	Link, Lift
45	56317039	1	Chassis Weldt
46	56317041	2	Shoe Assembly
*#	56317097	2	Replacement Shoe
*#	56317063	2	Shoe Bracket Weld't.
47	56317071	2	Ring **(QTY of 3 on AquaPLUS AXP)**
48	56317091	1	Hose, Vac
49	56317092	2	Bearing, Flange
50	56317093	1	Hose, Vac
51	56317121	1	Caster Swiv 4.0 x 2.0
52	56317127	1	Turnbuckle
53	56370878	2	Bearing, Sleeve
54	56317100	1	Solenoid, Pull Type **(L3 / AquaPLUS AXP)**
55	56388326	1	Bushing
56	56409152	1	Barb, 90 Elbow 1/2 x 1/2npt
57	56412182	1	Nipple, Hex 3/4-14
58	56467544	1	Chain
59	56756364	2	Clamp, Hose SAE #4
60	56900033	1	Barb, 90 Elbow 3/8 x 1/2npt
61	56900756	1	Clip, Conduit
62	56317070	1	Rod, Latch **(AquaPLUS AXP)**
63	56317067	1	Spring, Compression **(AquaPLUS AXP)**
64	56324505	2	Bearing, Flange **(AquaPLUS AXP)**
65	56002950	2	Nut, Hex Nyl Loc 5/16-24
66	56002826	2	Nut, Hex Nyl Loc-Thin 5/16-18
67	56304126	1	Cable Assy
68	56003730	2	Scr, Soc Hd .38 x .25 x 5/16-18
69	56003262	1	Ring, Ret Ext Type E .38 Dia **(AquaPLUS AXP)**
70#	56317156	1	Shoe Spacer, Foam

* = Not Shown
# = Revised or new since last update

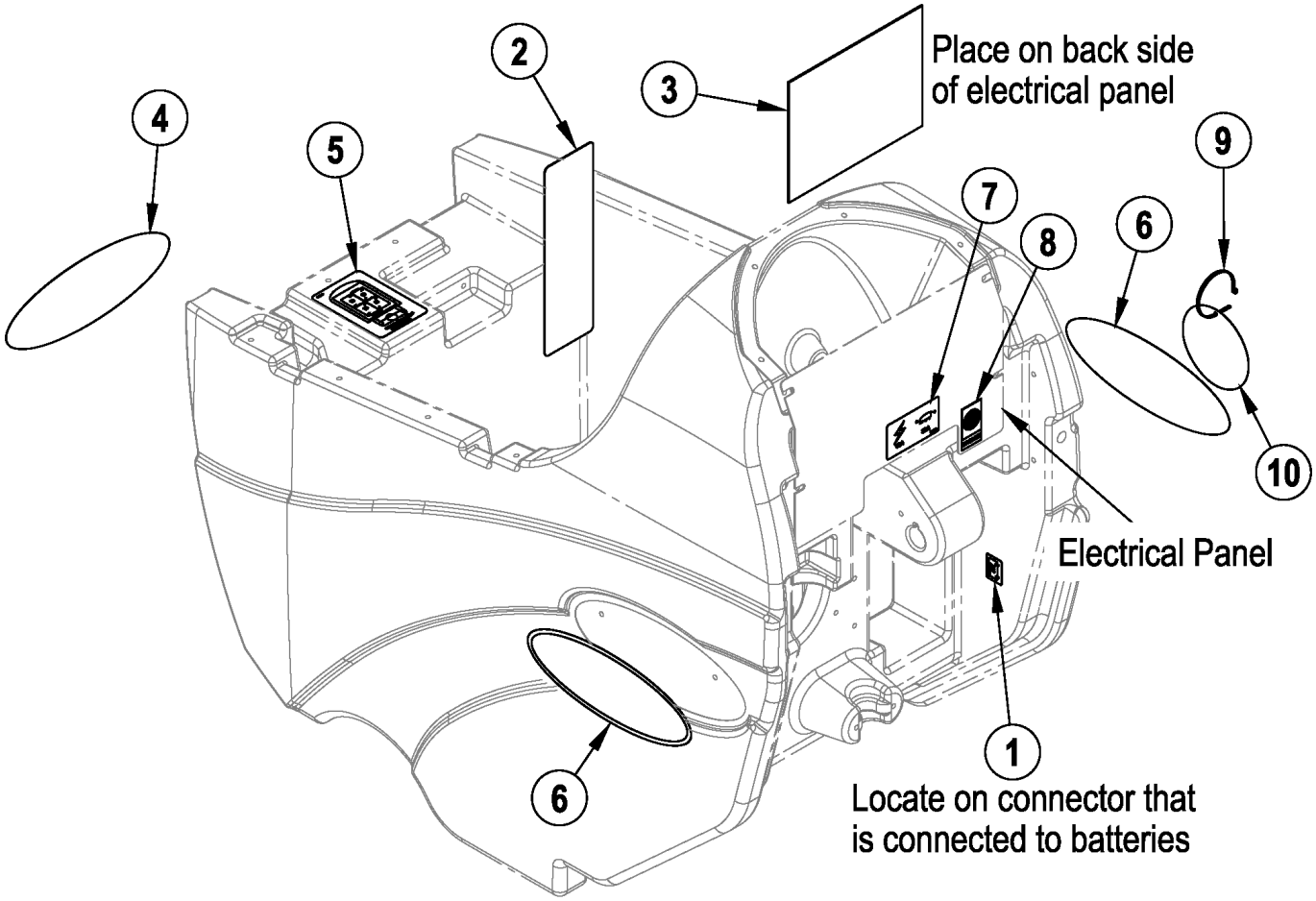
Place on back side
of electrical panel
Electrical Panel
Locate on connector that
is connected to batteries
1
2
3
4
5
6
6
7
8
9
10

Item	Ref. No.	Qty	Description
1	56054192	1	Decal, Charger
2	56014601	1	Decal, Caution
3	56015315	1	Decal, Ladder Diagram
4	56016349	1	Decal, Advance
5	56016688	1	Decal, Battery Wiring
6	56317125	2	Decal, AquaPLUS AXP
	56317124	2	Decal, AquaPLUS
7	56317131	1	Decal, Circuit Breaker
8#	56317151	1	Decal, CRI Bronze
9#	56317325789	1	Tie, Cable
10#	56040958	1	Tag, CRI

= Revised or new since last update

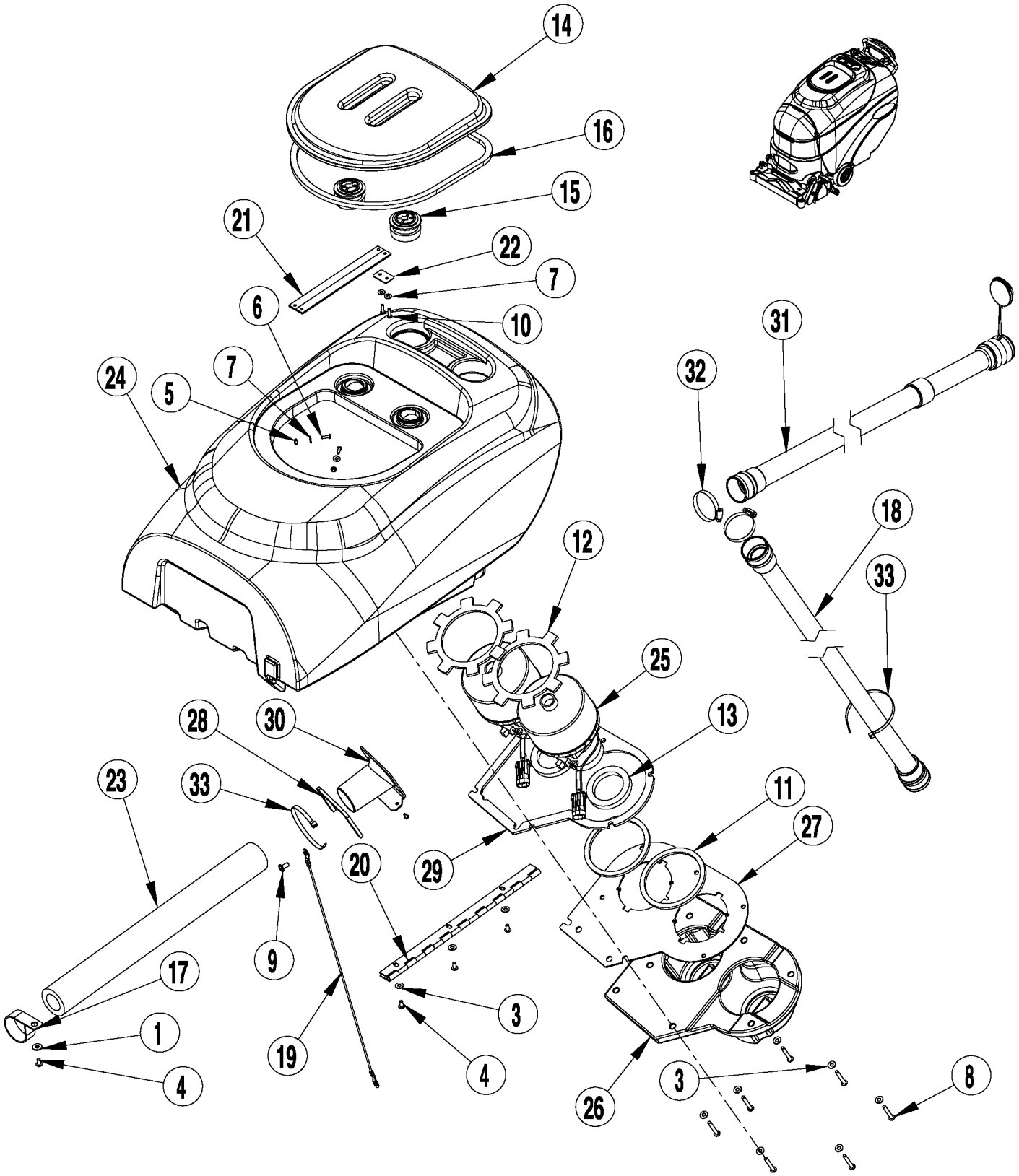

FORM NO. 56042476

Item	Ref. No.	Qty	Description
1	56001906	1	Wsh, Flt STD 1/4
2	56002043	2	Scr, Pan Phil 10-24 X .38
3	56002098	10	Wsh, Flt SAE 1/4
4	56002145	4	Scr, Pan Phil 1/4-20 X .50
5	56002849	2	Nut, Hex Nyl Loc-Thin SS 10-24
6	56002896	2	Scr, Pan Phil SS 10-24 X .62
7	56002919	4	Wsh, Flt Std SS #10
8	56002997	7	Scr, Pan Phil 1/4-20 X 1.75
9	56003003	1	Scr, Pan Phil 5/16-18 X .62
10	56009005	2	Scr, Pan Phil SS Type Ab 10-16 X .75
11	56212143	2	Gasket, Vacuum Duct
12	56264103	2	Gasket, Vacuum Motor
13	56314760	2	Gasket, Vacuum Duct
14#	56315176	1	Cover, Recovery Tank
15	56315099	2	Screen, Fan Inlet
16	56315220	1	Gasket, Recovery Lid
17	56315257	1	Clamp, P
18	56317150	1	Vac Hose Assy
19	56315272	1	Cable Assy
20	56315293	1	Hinge
21	56315303	2	Retaining, Strap
22	56315346	1	Plate
23	56317149	1	Foam, Acoustical
24	56317020	1	Tank, Recovery
25	56317025	2	Motor, Vac 24vdc **(M4)**
*	56397098	1	Carbon Brush set of 2 **(for 56317025)**
26	56317030	1	Cover, Vac
27	56317031	1	Plate, Vac
28	56317033	1	Gasket, Exhaust
29	56317034	1	Gasket, Cover
30	56317052	1	Tube, Exhaust
31	56397142	1	Drainhose
32	56440213	2	Clamp, Hose SAE #32
33	56477613	2	Tie, Cable

* = Not Shown
# = Revised or new since last update

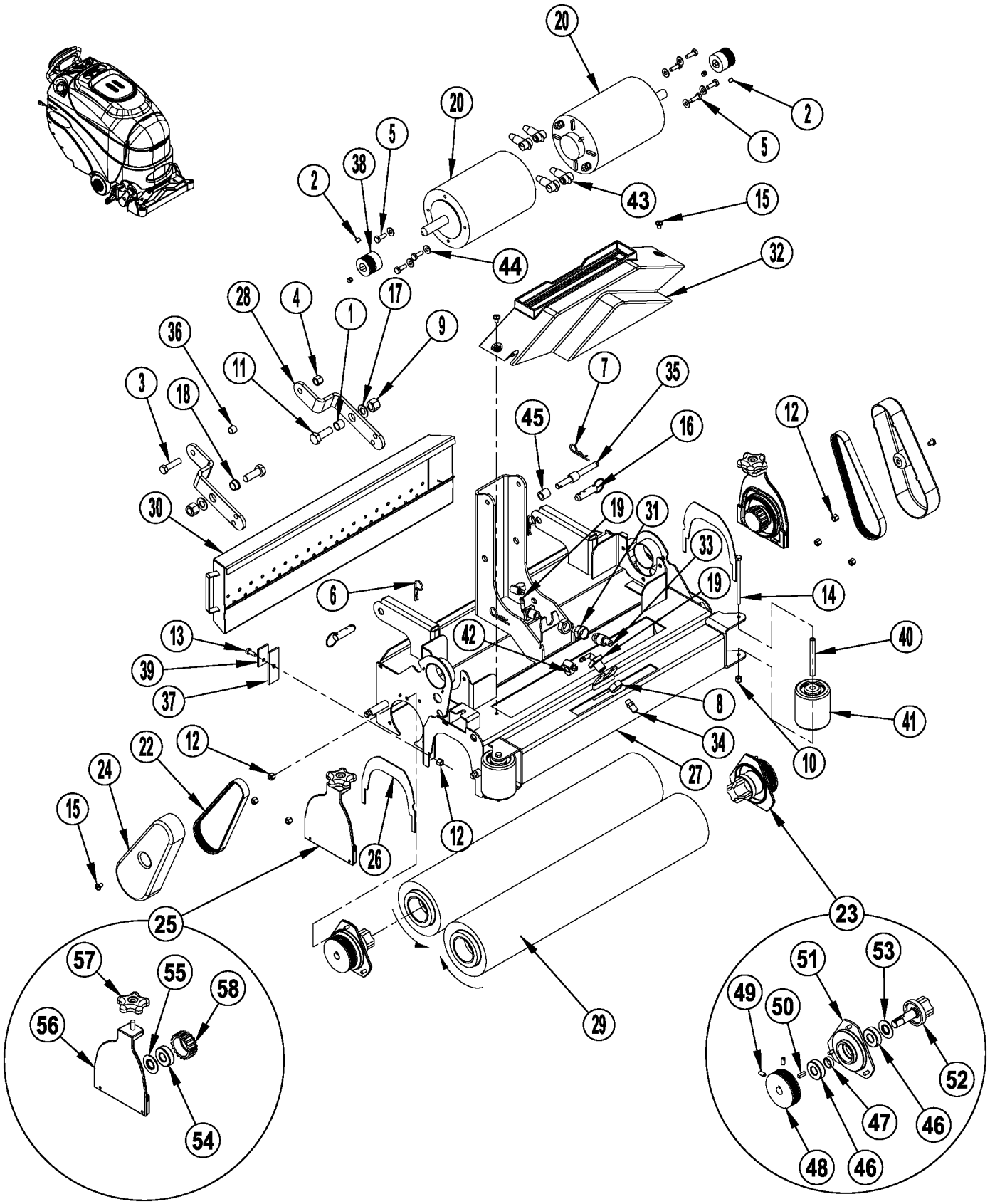

FORM NO. 56042476

Item	Ref. No.	Qty	Description
1	56367206	1	Bushing
2	56002086	4	Scr, Soc Set Loc 5/16-18 X .25
3	56002095	1	Scr, Hex 3/8-16 X 1.50
4	56002769	1	Nut, Hex Nyl Loc 3/8-16
5#	56002948	7	Scr,Hex Hd Loc 1/4-20 X.75
6	56002959	2	Pin, Cotter Hair
7	56003120	2	Pin, Cotter Hair .0915 X .375
8	56003272	2	Nut, Hex Jam SS 5/8-11
9	56003312	2	Nut, Hex Nyl Loc M12-1.75
10	56003403	2	Nut, Hex Nyl Loc M6-1
11	56003415	2	Scr, Hex M12-1.75 X 35mm
12	56003426	8	Nut, Hex Nyl Loc SS M6-1
13	56003431	2	Scr, Hex SS M6-1 X 16mm
14	56003492	2	Scr, Hex M6-1 X 95mm
15	56003603	4	Scr, Pan Phil Thd Form 1/4-20 X .38
16	56003671	2	Pin, Ring .50 X 1.25
17	56009003	2	Wsh, Flt .516 X .938 X .075
18	56185264	1	Bearing, Flange
19	56265388	2	Elbow, Panel Mount
20	56315061	2	Motor, 24 Vdc, .5 Hp, 1800 RPM **(M2 / M5)**
*	56412287	1	Brush / Spring Kit **(for 56315061)**
21	56315320	2	Harness, Brush
22#	56316053	2	Belt, Auto Tension
23#	56317157	2	Drive End Assy **(#46-53)**
24	56315445	2	Cover, Belt
25#	56315448	2	Idler End Assy **(#54-58)**
26	56316191	2	Gasket
27	56317021	1	Housing Weldment 24”
28	56317036	2	Link, Pivot
29#	56314389	2	Brush, Soft Nylon 24”
30	56317049	1	Hopper Weld’t, Extractor
31	56317053	1	Body, Nozzle Qjja
32	56317054	1	Cover, Nozzle
33	56317064	1	Nozzle, Spray #1
34#	56265052	1	Nozzle
35	56317084	1	Pin, Actuator
36	56388326	1	Bushing
37	56407391	2	Blade
38#	56316086	2	Sheave, Poly-V
39	56410214	2	Strap
40	56412176	2	Bushing
41	56412459	2	Wheel
42	56756364	2	Clamp, Hose SAE #4
43#	56409538	4	Insulator, Terminal
44#	56009064	7	Wsh, Int Shprf 1/4
45#	56317147	1	Bushing
46	56106070	2	Bearing, Ball
47	56407389	1	Spacer
48#	56316054	1	Sheave, Poly-V
49	56002119	2	Scr, Soc Set Loc 1/4-20 x .50
50	56003237	1	Key, Sq. .19 x .62
51	56315405	1	Bearing Plate
52	56407557	1	Spindle
53	56407558	1	Washer, Bearing
54	56106070	1	Bearing, Ball
55	56407558	1	Washer, Bearing
56	56315447	1	Idler Bearing Plate
57	56396254	1	Knob
58	56407551	1	Hub

* = Not Shown
\# = Revised or new since last update

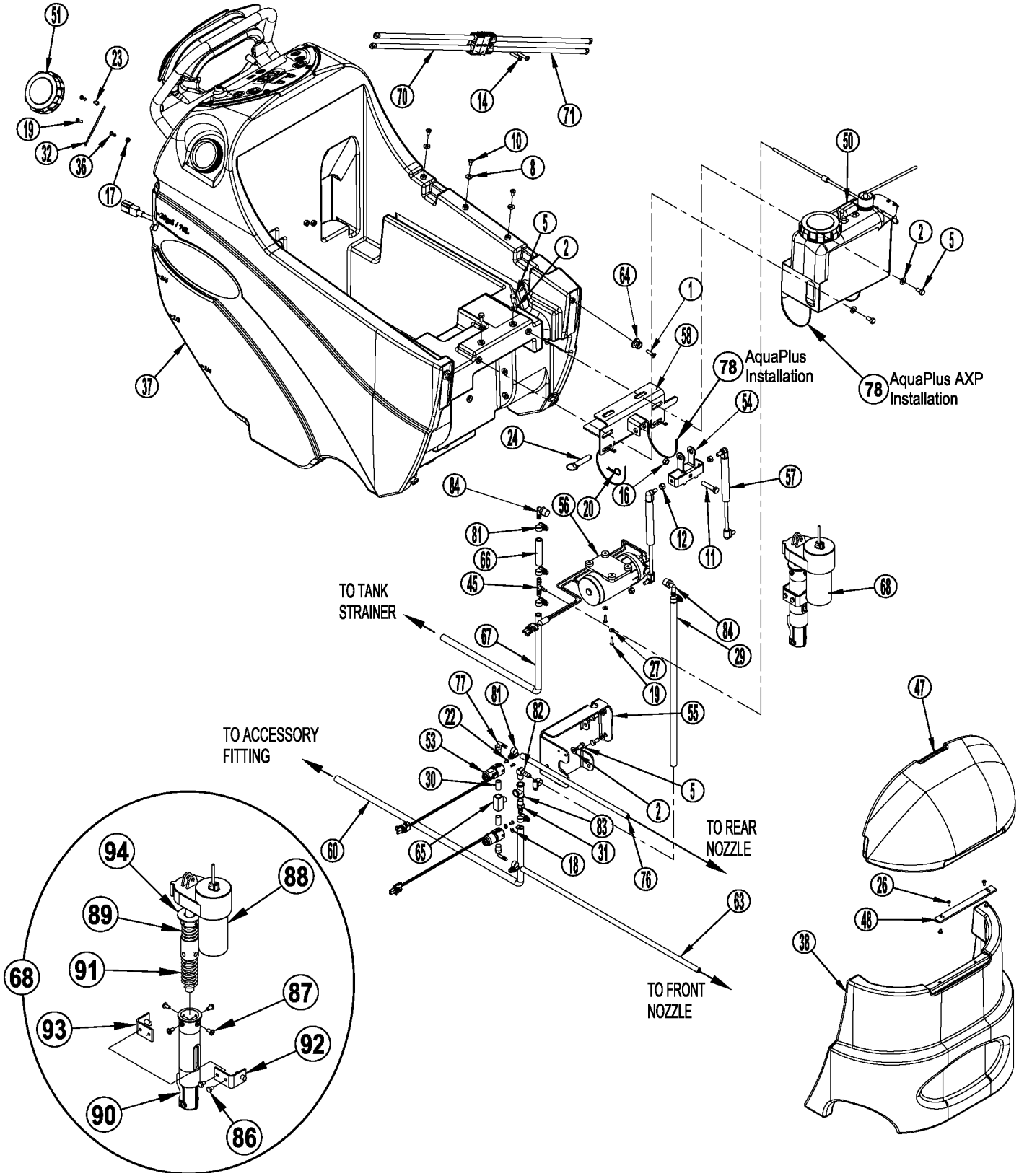

FORM NO. 56042476

Item	Ref. No.	Qty	Description
1	56001832	4	Scr, Flt Phil 1/4-20 X 1.00
2	56001939	7	Wsh, Flt Sae 5/16 **(QTY of 5 on AquaPLUS)**
3	56001954	6	Wsh, Flt Sae #10
4	56001993	2	Scr, Pan Phil 10-24 X .50
5	56002035	7	Scr, Hex 5/16-18 X .62
6	56002066	7	Scr, Pan Phil 1/4-20 X .62
7	56002094	4	Scr, Hex 5/16-18 X 1.50
8	56002098	4	Wsh, Flt Sae 1/4
9	56002124	10	Scr, Pan Phil 10-24 X .62
10	56002145	5	Scr, Pan Phil 1/4-20 X .50
11	56002684	1	Scr, Hex 3/8-16 X 1.75
12#	56002826	4	Nut, Hex Nyl Loc-Thin 5/16-18
13	56002708	4	Nut, Hex Nyl Loc 1/4-20
14	56002825	2	Scr, Pan Phil 1/4-20 X 1.25
15	56002832	2	Nut, Hex Nyl Loc-Thin 10-24
16	56002841	1	Nut, Hex Nyl Loc-Thin 3/8-16
17	56002849	1	Nut, Hex Nyl Loc-Thin Ss 10-24
18	56002875	2	Wsh, Flt Sae Ss #8
19	56002894	3	Scr, Pan Phil Ss 10-24 X .75
20	56002959	1	Pin, Cotter Hair
22	56003018	4	Scr, Pan Phil Ss 8-32 X .38
23	56003633	1	Scr, Pan Phil Ss Type B 10-16 X .50
24	56003679	1	Pin, Ring .50 X 1.63
25	56009030	3	Scr, Pan Phil Thd Form 10-24 X .38
26	56009139	4	Scr, Pan Phil Loc 10-24 X .38
27	56009205	2	Wsh, Flt Ss .219 X .500 X .047/.062
28	56009206	4	Scr, Truss Phil-Blk 10-24x.50
29	56054146	1	Tube, Vinyl
30	56150223	2	Nipple, 1/4npt X .88/1.12
31	56155640	1	Barb, Adapter 3/8 X 1/4npt
32	56212242	1	Chain
33	56244969	1	Clamp, Hose Sae #12
34	56264442	1	Barb, 90 Ebow 3/4 X 3/8npt
35	56303553	1	Key Switch Assembly **(S1)**
*	56303526	A/R	Set of 2 Replacement Keys
36	56311057	2	Coupler, Chain
37	56315089	1	Tank, Solution
38	56315104	1	Nose Cone, 24-26 Commercial
40	56315124	1	Charger, On-Board 24v
41	56315206	1	Bracket, Charger
42	56315222	1	Panel, Electrical
43	56315256	1	Circuit Breaker, 30 Amp **(CB2)**
44	56315259	1	Plate, Circuit Breaker
45	56315265	1	Tee, Barb **(AquaPLUS AXP)**
46	56315270	1	Charger Cord, Us
47	56315284	1	Cover, Chemical Bottle
48	56315285	1	Hinge
49	56315382	1	Clip, Conduit
50	56315501	1	Chemical Tank AS **(AquaPLUS AXP)**
51	56315517	1	Cap, Raw
52	56315532	1	Gasket
53	56317024	2	Valve, Solenoid 24v **(L1 / L2)**
54	56317026	1	Yoke, Actuator
55	56317038	1	Bracket Linkage Pivot
56	56317045	1	Pump, 24vdc **(M7)**
57	56317072	2	Gas Spring
58	56317078	1	Actuator Bracket Weldt
59	56317128	1	Assy, Electrical Box **(86-97)**
60	56317083	1	Hose, 33”
61	56317098	1	Assembly, Paddle
62	56317111	1	Control Panel Assy **(A1)**
**	56317114	1	Replacement Membrane Switch Assy for 56317111
63	56317122	1	Hose, 1/4 X 25.00 Long
64	56365777	4	Lug, Brush Driver
65	56372506	1	Tee, Branch 1/4 Br
66	56387214	1	Hose, 3.0”_E00169 **(AquaPLUS AXP)**
67	56391773	1	Hose, 23” **(AquaPLUS AXP)**
*	56317132	1	Hose, 27” **(AquaPLUS)**
68	56396049	1	Lift Actuator Assembly **(M12 / 86-96)**
69	56396143	1	Hose, Pvc
70	56397187	1	Connector Assy **(connected to batteries)**
71	56397188	1	Connector Assy **(connected to machine)**
72	56407361	2	Clamp, Plastic
73	56409152	1	Barb, 90 Elbow 1/2 X 1/2npt
74	56410166	2	Clamp,P
75	56412285	1	Gasket, Elect. Cover
76	56456560	1	15.00” Hose
77	56470138	2	Barb, 90 Elbow 1/4 X 1/4npt
78#	56478523	2	Tie, Cable
79	56486112	2	Clamp,P
80	56507644	1	Circuit Breaker, 10 Amp **(CB1)**
81	56756364	8	Clamp, Hose SAE #4 **(QTY of 6 on AquaPLUS)**
82	56756739	1	Elbow,90 Barb Male
83	56900027	1	Tee, Female Union
84	56900035	2	Barb, 90 Elbow 3/8 X 3/8npt
85#			**Deleted Intentionally**
86	56002462	7	Scr, Pan Phil 1/4-20 X .38
87	56002561	4	Nut, Hex W/ Shprf 1/4-20
88	56003698	2	Scr, Pan Phil Thd Form 8-32 X .75
89	56009030	1	Scr, Pan Phil Thd Form 10-24 X .38
90	56009203	3	Stud, 1/4-20
91	56317081	1	Panel, Electrical
92#	56317101	1	Contactor, 24vdc 100a **(K1)**
93	56317102	1	Controller, Speed **(A2)**
94	56409538	4	Insulator, Terminal
95	56412089	1	Fuse, 150 Amp **(F1)**
96	56469858	3	Standoff, Insulated
97#	56317116	1	Contactor, 24vdc 200a **(K2)**

* = Not Shown
\# = Revised or new since last update

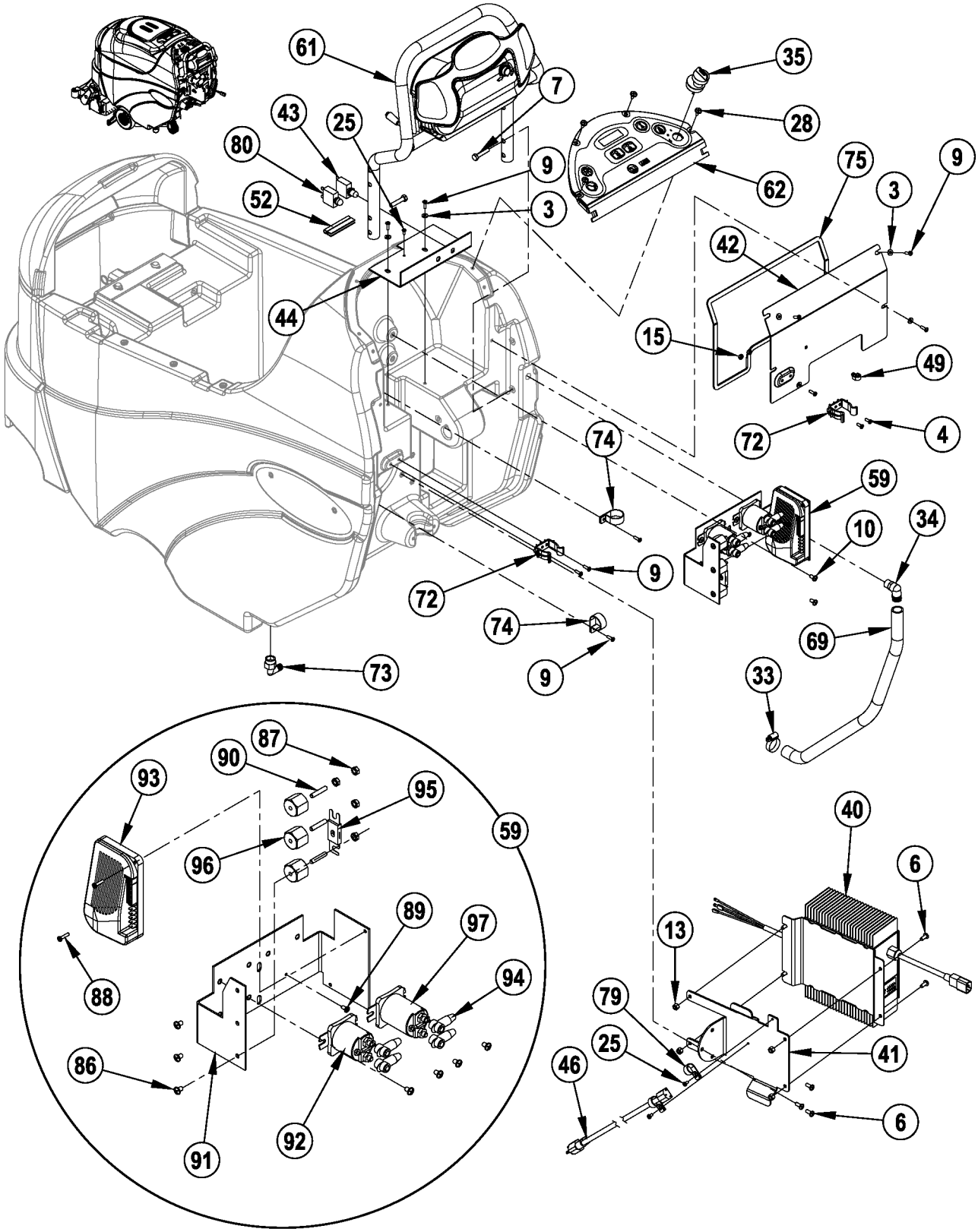

FORM NO. 56042476

Item	Ref. No.	Qty	Description
1	56001832	4	Scr, Flt Phil 1/4-20 X 1.00
2	56001939	7	Wsh, Flt Sae 5/16 **(QTY of 5 on AquaPLUS)**
3	56001954	6	Wsh, Flt Sae #10
4	56001993	2	Scr, Pan Phil 10-24 X .50
5	56002035	7	Scr, Hex 5/16-18 X .62
6	56002066	7	Scr, Pan Phil 1/4-20 X .62
7	56002094	4	Scr, Hex 5/16-18 X 1.50
8	56002098	4	Wsh, Flt Sae 1/4
9	56002124	10	Scr, Pan Phil 10-24 X .62
10	56002145	5	Scr, Pan Phil 1/4-20 X .50
11	56002684	1	Scr, Hex 3/8-16 X 1.75
12#	56002826	4	Nut, Hex Nyl Loc-Thin 5/16-18
13	56002708	4	Nut, Hex Nyl Loc 1/4-20
14	56002825	2	Scr, Pan Phil 1/4-20 X 1.25
15	56002832	2	Nut, Hex Nyl Loc-Thin 10-24
16	56002841	1	Nut, Hex Nyl Loc-Thin 3/8-16
17	56002849	1	Nut, Hex Nyl Loc-Thin Ss 10-24
18	56002875	2	Wsh, Flt Sae Ss #8
19	56002894	3	Scr, Pan Phil Ss 10-24 X .75
20	56002959	1	Pin, Cotter Hair
22	56003018	4	Scr, Pan Phil Ss 8-32 X .38
23	56003633	1	Scr, Pan Phil Ss Type B 10-16 X .50
24	56003679	1	Pin, Ring .50 X 1.63
25	56009030	3	Scr, Pan Phil Thd Form 10-24 X .38
26	56009139	4	Scr, Pan Phil Loc 10-24 X .38
27	56009205	2	Wsh, Flt Ss .219 X .500 X .047/.062
28	56009206	4	Scr, Truss Phil-Blk 10-24x.50
29	56054146	1	Tube, Vinyl
30	56150223	2	Nipple, 1/4npt X .88/1.12
31	56155640	1	Barb, Adapter 3/8 X 1/4npt
32	56212242	1	Chain
33	56244969	1	Clamp, Hose Sae #12
34	56264442	1	Barb, 90 Ebow 3/4 X 3/8npt
35	56303553	1	Key Switch Assembly **(S1)**
*	56303526	A/R	Set of 2 Replacement Keys
36	56311057	2	Coupler, Chain
37	56315089	1	Tank, Solution
38	56315104	1	Nose Cone, 24-26 Commercial
40	56315124	1	Charger, On-Board 24v
41	56315206	1	Bracket, Charger
42	56315222	1	Panel, Electrical
43	56315256	1	Circuit Breaker, 30 Amp **(CB2)**
44	56315259	1	Plate, Circuit Breaker
45	56315265	1	Tee, Barb **(AquaPLUS AXP)**
46	56315270	1	Charger Cord, Us
47	56315284	1	Cover, Chemical Bottle
48	56315285	1	Hinge
49	56315382	1	Clip, Conduit
50	56315501	1	Chemical Tank AS **(AquaPLUS AXP)**
51	56315517	1	Cap, Raw
52	56315532	1	Gasket
53	56317024	2	Valve, Solenoid 24v **(L1 / L2)**
54	56317026	1	Yoke, Actuator
55	56317038	1	Bracket Linkage Pivot
56	56317045	1	Pump, 24vdc **(M7)**
57	56317072	2	Gas Spring
58	56317078	1	Actuator Bracket Weldt
59	56317128	1	Assy, Electrical Box **(86-96)**
60	56317083	1	Hose, 33”
61	56317098	1	Assembly, Paddle
62	56317111	1	Control Panel Assy **(A1)**
**	56317114	1	Replacement Membrane Switch Assy for 56317111
63	56317122	1	Hose, 1/4 X 25.00 Long
64	56365777	4	Lug, Brush Driver
65	56372506	1	Tee, Branch 1/4 Br
66	56387214	1	Hose, 3.0”_E00169 **(AquaPLUS AXP)**
67	56391773	1	Hose, 23” **(AquaPLUS AXP)**
*	56317132	1	Hose, 27” **(AquaPLUS)**
68	56396049	1	Lift Actuator Assembly **(M12 / 86-96)**
69	56396143	1	Hose, Pvc
70	56397187	1	Connector Assy **(connected to batteries)**
71	56397188	1	Connector Assy **(connected to machine)**
72	56407361	2	Clamp, Plastic
73	56409152	1	Barb, 90 Elbow 1/2 X 1/2npt
74	56410166	2	Clamp,P
75	56412285	1	Gasket, Elect. Cover
76	56456560	1	15.00” Hose
77	56470138	2	Barb, 90 Elbow 1/4 X 1/4npt
78#	56478523	2	Tie, Cable
79	56486112	2	Clamp,P
80	56507644	1	Circuit Breaker, 10 Amp **(CB1)**
81	56756364	8	Clamp, Hose SAE #4 **(QTY of 6 on AquaPLUS)**
82	56756739	1	Elbow,90 Barb Male
83	56900027	1	Tee, Female Union
84	56900035	2	Barb, 90 Elbow 3/8 X 3/8npt
85#			**Deleted Intentionally**
86	56002462	7	Scr, Pan Phil 1/4-20 X .38
87	56002561	4	Nut, Hex W/ Shprf 1/4-20
88	56003698	2	Scr, Pan Phil Thd Form 8-32 X .75
89	56009030	1	Scr, Pan Phil Thd Form 10-24 X .38
90	56009203	3	Stud, 1/4-20
91	56317081	1	Panel, Electrical
92#	56317101	1	Contactor, 24vdc 100a **(K1)**
93	56317102	1	Controller, Speed **(A2)**
94	56409538	4	Insulator, Terminal
95	56412089	1	Fuse, 150 Amp **(F1)**
96	56469858	3	Standoff, Insulated
97#	56317116	1	Contactor, 24vdc 200a **(K2)**

* = Not Shown
# = Revised or new since last update

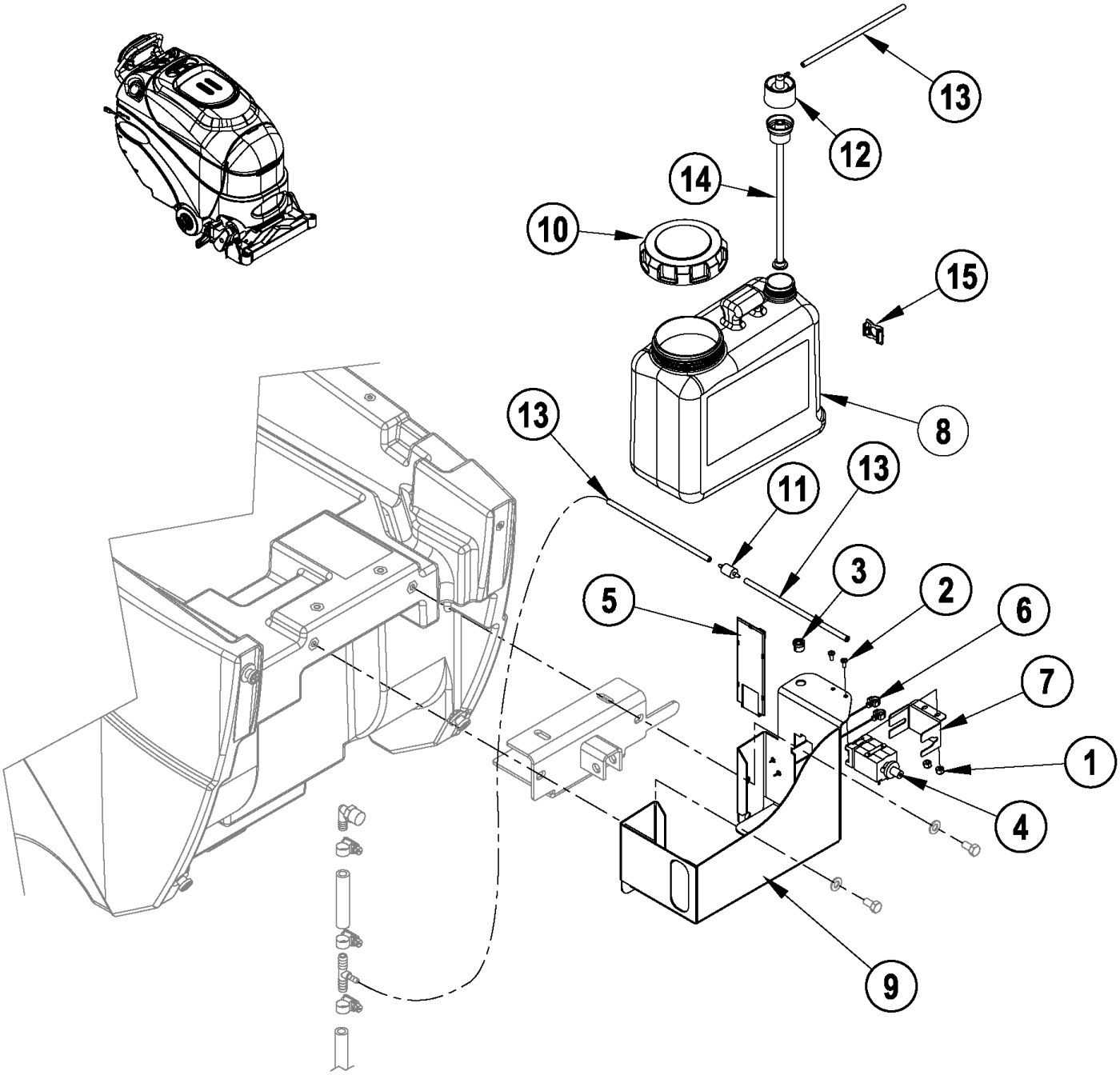
13
12
14
10
15
8
13
11
13
3
2
5
6
7
1
4
9

Item	Ref. No.	Qty	Description
	56315501	1	Chemical Tank Assy **(1-14)**
1	56002877	2	Nut, Hex Nyl Loc SS 8-32
2	56003018	2	Scr, Pan Phil SS 8-32 x .38
3	56003699	1	Bushing, 1/4 ID Snub
4	56315241	1	Pump, Chemical
5	56315340	1	Circuit Board Assy
6	56315382	2	Clip, Conduit
7	56315476	1	Bracket, Chemical Pump
8	56315502	1	Chemical Bottle As
**	56317144	A/R	AXP Multi / Prespray 4 pack
9	56315515	1	Bracket, Tank Mounting
10	56315517	1	Cap
11	56315522	1	Check Valve, 1/8 Barb, 125PSI
12	56315523	1	Cap, Dry Break, 1/8 Barb, 90°
13	56315524	3	Hose, Chemical Resistant, 7”
14	56315527	1	Insert, Dry Break
15	56315511	1	Indicator Assy
**	56315503	A/R	Chemical Bottle Assy (8, 10, 14)

** = Optional, Not Included

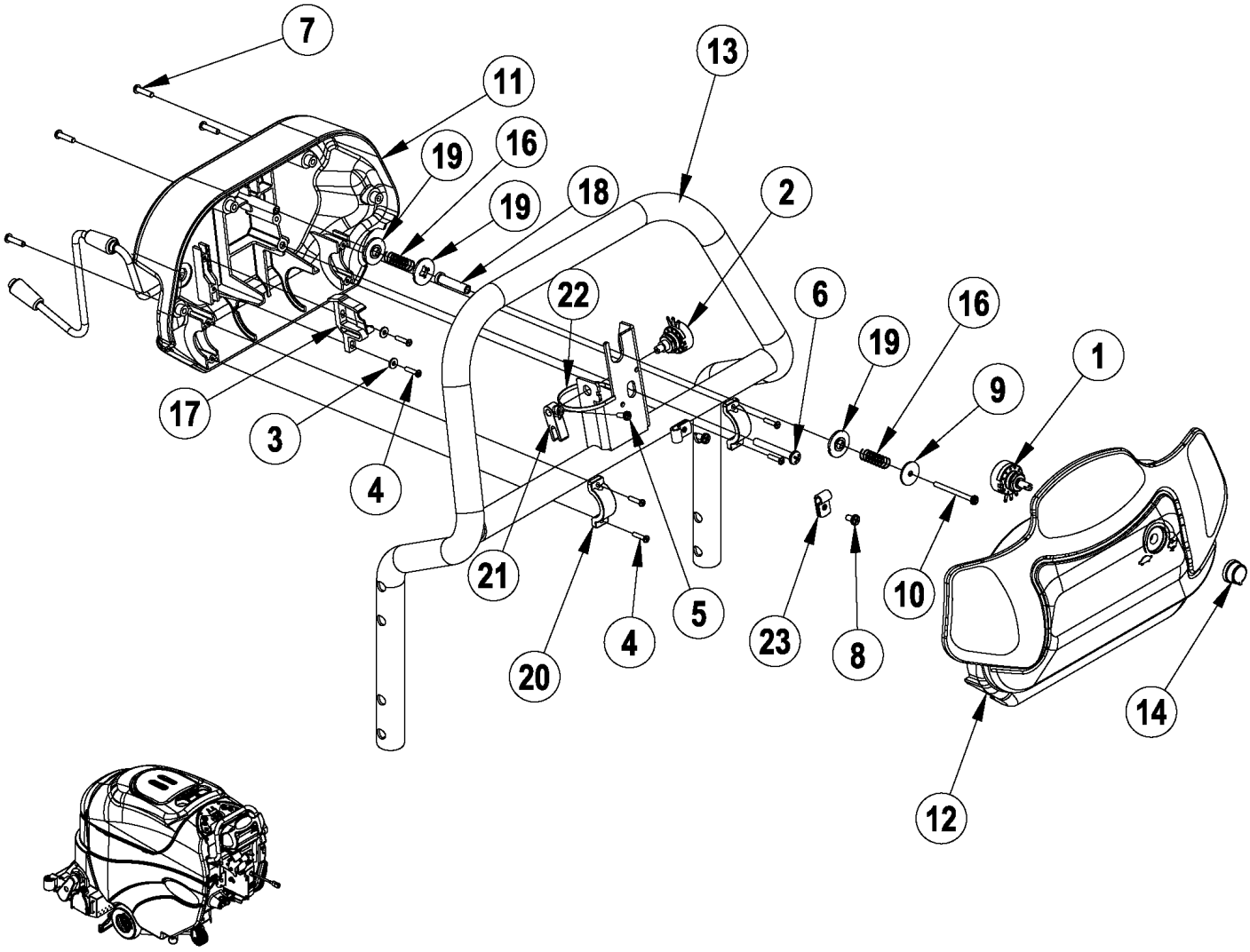
7
11
19
16
19
18
13
2
22
6
16
19
1
9
17
3
4
21
5
4
20
23
8
10
14
12

Item	Ref. No.	Qty	Description
	56317098	1	Assembly, Paddle
1	56396197	1	Potentiometer, 100k **(R2)**
2	56397029	1	Potentiometer, 5k **(R1)**
3	56002006	2	Wsh, Flt SAE #6
4	56003197	6	Scr, Pan Phil Plastite 6-18 X .62
5	56003354	1	Scr, Pan Phil M4-0.7 X 12mm
6	56003527	1	Scr, Pan Phil Plastite 1/4-1 X 2.00
7	56003545	4	Scr, Pan Phil Plastite 8-10 X .75
8	56009030	2	Scr, Pan Phil Thd Form 10-24 X .38
9	56009096	1	Wsh, Flt .193 X .875 X .060
10	56009287	1	Scr, Pan Phil Type B 8 X 2.00
11	56315229	1	Paddle, Back Cover
12	56315230	1	Paddle, Front Cover
13	56315251	1	Weldment, Handle Bar
14	56315280	1	Knob
15	56317112	1	Harness, Handle
16	56325654	2	Spring, Compression
17	56397015	1	Cam Controller
18	56397109	1	Sleeve
19	56397170	3	Washer, Plastic
20	56397171	2	Clamp
21	56397172	1	Potentiometer Fork
22	56478246	1	Tie, Cable
23	56481890	2	Clamp,P

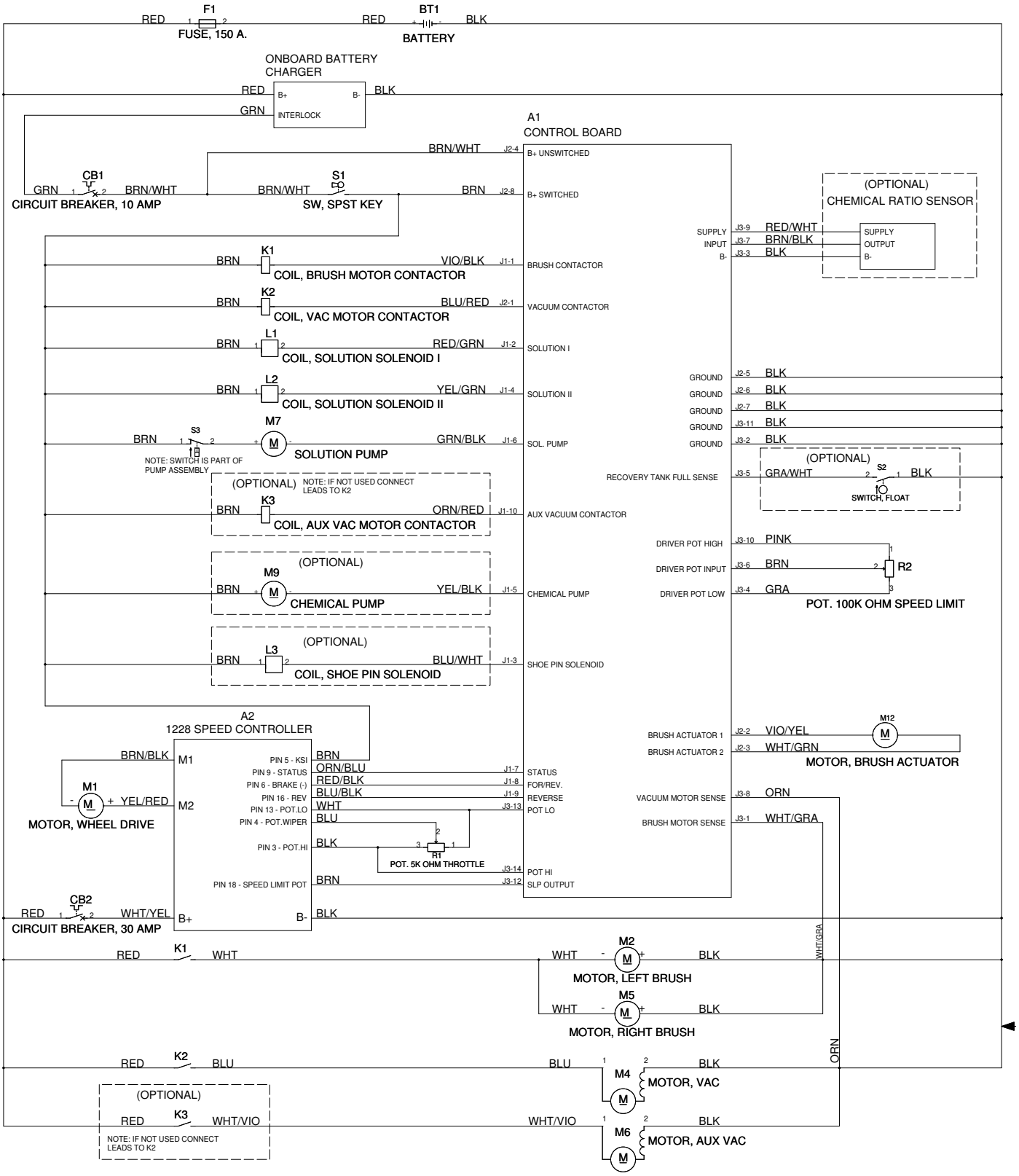
F1
FUSE, 150 A.
BT1
BATTERY
ONBOARD BATTERY CHARGER
INTERLOCK
A1
CONTROL BOARD
CB1
CIRCUIT BREAKER, 10 AMP
S1
SW, SPST KEY
K1
COIL, BRUSH MOTOR CONTACTOR
K2
COIL, VAC MOTOR CONTACTOR
L1
COIL, SOLUTION SOLENOID I
L2
COIL, SOLUTION SOLENOID II
M7
SOLUTION PUMP
S3
NOTE: SWITCH IS PART OF PUMP ASSEMBLY
(OPTIONAL)
NOTE: IF NOT USED CONNECT LEADS TO K2
K3
COIL, AUX VAC MOTOR CONTACTOR
M9
CHEMICAL PUMP
L3
COIL, SHOE PIN SOLENOID
(OPTIONAL)
CHEMICAL RATIO SENSOR
SUPPLY
OUTPUT
S2
SWITCH, FLOAT
R2
POT. 100K OHM SPEED LIMIT
M12
MOTOR, BRUSH ACTUATOR
A2
1228 SPEED CONTROLLER
M1
MOTOR, WHEEL DRIVE
R1
POT. 5K OHM THROTTLE
CB2
CIRCUIT BREAKER, 30 AMP
M2
MOTOR, LEFT BRUSH
M5
MOTOR, RIGHT BRUSH
M4
MOTOR, VAC
M6
MOTOR, AUX VAC
NOTE: IF NOT USED CONNECT LEADS TO K2

Item	Ref. No.	Qty	Description
A1	56317111	1	Control Panel Assy
A2	56317102	1	Speed Control
BT1	NA	4	Battery (see “Optional Kits & Accessories” page)
CB1	56507644	1	Circuit Breaker, 10 Amp
CB2	56315256	1	Circuit Breaker, 30 Amp
F1	56412089	1	Fuse, 150 Amp
K1	56317101	1	Contactor, Brush Motor
K2	56317101	1	Contactor, Vac Motor
K3	56317101	1	Contactor, Aux Vac Motor **(Optional)**
L1	56317024	1	Solenoid 1, Solution
L2	56317024	1	Solenoid 2, Solution
M1	56315062	1	Transaxle, 24V
*	56315377	1	Motor
*	56315378	4	Carbon Brush
*	56315379	2	Neoprene Mounting Sleeve
M2	56315061	1	Motor, 24 Vdc, .5 Hp, 1800 RPM **(Left)**
*	56412287	1	Brush / Spring Kit **(for 56315061)**
M4	56317025	1	Motor, Vac 24vdc
*	56397098	1	Carbon Brush set of 2 **(for 56317025)**
M5	56315061	1	Motor, 24 Vdc, .5 Hp, 1800 RPM **(Right)**
*	56412287	1	Brush / Spring Kit **(for 56315061)**
M6	56317025	1	Motor, Vac 24vdc **(AUX)**
*	56397098	1	Carbon Brush set of 2 **(for 56317025)**
M7	56317045	1	Pump, Solution
M9	56315241	1	Pump, Chemical **(Optional)**
M12	56396049	1	Lift Actuator Assembly
R1	56397029	1	Potentiometer, 5K Ohm, Throttle
R2	56396197	1	Potentiometer, 100K Ohm, Speed Limit
S1	56303553	1	Key Switch Assembly
*	56303526	A/R	Set of 2 Replacement Keys
S2	N/A	1	Switch, Float **(Optional)**
S3	N/A	1	Switch **(part of M7)**
*	56315124	1	Charger, Onboard 24V **(Onboard Charger Models Only)**
*	56315747	1	Thermistor Repair Kit for 56315124
*	56315340	1	Chemical Ratio Sensor **(AXP Models Only)**
*	56317109	1	Harness, Main
*#	56317115	1	Harness, Scrub Deck Ground
*	56416445	3	Cable Assy 4 AWG **(Battery Cables)**
*	56372673	8	Boot, Battery Post
*	56478523	2	Tie, Cable
*	56478246	9	Tie, Cable
*	56314119	1	Spacer. Battery

* = Not Shown
# = Revised or new since last update

	Ref. No.	Qty	Description
			Optional Kits
**	56317136	1	Kit, Scrub & Vac Tool W/Caddy
*	56040913	1	Instruction Sheet
**	56315312	1	Squeegee Wand Kit
*	56040825	1	Instruction Sheet
**	56317114	A/R	Panel Assy
*	56040933	1	Instruction Sheet
**	56315732	1	QuiQ Programmer Kit
**#	56317153	1	Kit, Float Switch

Replacement parts for the kits listed above can be found on each kit's associated instruction sheet.

			Accessories
**	56315316	A/R	Tote Bag
**	56397453	6	Indicator, Battery Level **(1 per battery)**
**	56409441	A/R	Programmer, 1307 User
**	56409823	A/R	Programmer Cable
**	56262209	A/R	Light Duty Soft Floor Drag Wand
**	56265305	A/R	Heavy Duty Soft Floor Drag Wand
**	56220109	A/R	Upholstery Tool Assy
**	56220070	A/R	Upholstery Tool Assy
**	56265368	A/R	Hose Assy, 8 FT
**	56265174	A/R	Hose Assy, 15 FT
**	56317144	A/R	AXP Multi / Prespray 4 PK
**	56315503	A/R	Chemical Bottle Assy
			Optional Batteries
**	56206987	4	Battery, 6V 180AH Gel
**	56206117	4	Battery, 6V 195AH Wet
**	56206079	4	Battery, 6V 235AH Wet
**#	56317154	4	Battery, 6V 251AH Wet
**#	56315772	4	Battery, 6V 255AH Sealed
			Optional Battery Chargers
**	56388109	A/R	Charger, 24V 25A 110V

* = Not Shown
** = Optional, Not Included
# = Revised or new since last update

Nilfisk-Advance, Inc.
14600 21st Avenue North
Plymouth, MN 55447-3408
www.nilfisk-advance.com
Phone: 800-989-2235
Fax: 800-989-6566
©2007 Nilfisk-Advance, Inc.